634RF Modular Access Control Power Supply

- Field Selectable 12VDC or 24VDC Output - Standard
- Dual 12VDC and 24VDC Output - Optional
- Automatic or Manual Power Up After Emergency Release or Loss of Power

"Security Industry Finest"
ISC Expo

Quality, Performance and Versatility

The SDC 634RF Power Supplies have been developed specifically to support electric locks and access controls. The high performance, heavy-duty 4 Amp circuitry is ideal for inductive loads and multi-door applications. The modular design is built around several different application control modules to meet your specific needs for virtually any electric lock system. Documentation is provided to ensure a well organized installation for individual or multi-door systems that may include locking devices, access controls, station controls and consoles for remote control, annunciation and auxiliary emergency release interface. SDC 600 Series power supplies are manufactured according to ISO 9001 certified quality standards.

Modular Design

Ten different, individually fused door control modules are available for virtually any application. Time delays, latching relays and multiple station circuit breaker modules are available for custom configuration.

DIP Switch Select System Operation

Specification of the UR Series Access Hardware Controller provides for six standard DIP switch selectable system and mantrap variations for multiple door systems.

Features

Filtered and Regulated
The solid state regulator maintains the selected output voltage at 12VDC or 24VDC regardless of the output load changes, including battery charging. The output filtering stabilizes the SDC output voltage and eliminates AC line noise. The power supply is equipped with a circuit breaker protected input and three PTC protected outputs.

Battery Charger Output
A separate current limited built-in battery charger output provides 13.5VDC or 27VDC. Up to six 12VDC, 7 Amp Hour batteries may be housed in the 634RF cabinet to provide up to 42 Amp Hour @ 12VDC or 21 Amp Hour back-up capacity @ 24VDC.

Low Battery Disconnect
Batteries are automatically disconnected from the secondary output circuit when the voltage decreases below 70%. This ensures batteries are capable of recharging.

LED System Status Indicator
Amber - AC and DC voltages are OK
Green - No DC output
Red - No AC input, powered by batteries

Value Added Features

Isolated Charging Circuit
While the charging output is 13.5VDC or 27VDC, the secondary output is unaffected and maintained at the selected 12VDC or 24VDC. This ensures system components are powered by their specified voltage.

The secondary output current is maintained at the full 4 Amp capacity and is not de-rated when charging batteries.

Class 2 Outputs
The 634RF Power Supply may be configured to use one 4 Amp output or two 2 Amp, Class 2 outputs. Where permitted by code, conduit is not required for low voltage wiring when using Class 2 outputs. The total current draw from all outputs must not exceed 4 Amps.

Emergency Release Input with Manual Reset Capability
The auxiliary emergency release input may be configured for manual reset for compliance where required by code.

Field Selectable 12 or 24VDC
The output is field selectable for 12 or 24VDC output.

Large Heavy Gauge Enclosure
The 16 gauge, 16" W x 14" H x 6.5" D enclosure is large enough to accommodate up to eight door control modules or six 7 Amp Hour batteries with plenty of room for wiring.

Model

634RF 4 Amp Power Supply
One 4 Amp output and two
2 Amp Class 2 outputs standard

Options

FB-4 Four fuse protected outputs provide precisely calculated circuit protection. Four modules provide 16 outputs.

MR Manual Reset for Fire Release

KL Key locked cover.

14-2 7-day skip-a-day timer.

PS-1 On-Off Push switch in cabinet.

PS-1A On-Off Push switch on cover.

230V 220/230VAC, 50/60/HZ input.

Voltage

Dual 12VDC and 24VDC Outputs (optional)
12VDC regulated and filtered output module with the power supply output set at 24VDC for locking devices and components, the addition of the 12VR provides a separate 12VDC, 500 mA output for 12VDC access controls and components. The total combined 12V/24V load may not exceed 4 Amps. Add up to four 12VR modules max.
Input: 24VDC
Output: 500 mA @ 12VDC

Standby Power

SDC power supplies equipped with batteries provide continuous operation of access controls, locking devices and peripheral components during a power failure.
The 634RF power supply is capable of accommodating up to six 7 Amp Hour batteries. See Table 2 & 3 to determine battery requirements for standby power.

RB12V7 12VDC, 7 Amp Hour Battery
634RF 6 max.

Specifications

Input:
1 Amp @115VAC 50/60 Hz
(230VAC 50/60Hz optional, not UL listed)

Input Protection:
1 Amp, manually resetable circuit breaker

Selectable Secondary Output:
One, 4 Amp @ 12VDC or 24VDC or
Two, Class 2, 2 Amp @12VDC or 24VDC

Output Protection:
Auto resetting Poly Fuse per output

Battery Charger Output:
500 mA @ 13.5 or 27VDC

Battery Charger Protection:
Auto resetting Poly Fuse

Dimensions: 16" W x 14" H x 6.5" D
(406 W x 355 H x 165 D mm)

Material: 16 gauge (1.52 mm) steel

FB-4

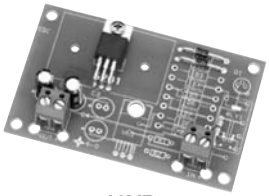

12VR

634RF x 2 UR4A x 2 RB12V7

TABLE 1: Control Module Capacity

QTY Batteries	ACM-1	CR	CR-4	FB-4	LR	PB	TD	UR	12VR
0 - 2	4	8	4	8	8	4	8	2	4
4 - 6	2	6	2	6	6	4	6	1	4

How to Order

Specify model, options, modules and batteries.
Example: 634RF x KL x 2 CR-4 x 6 RB12V7
634RF x PS-1 x 4 PTC4-075 x 6 RB12V7

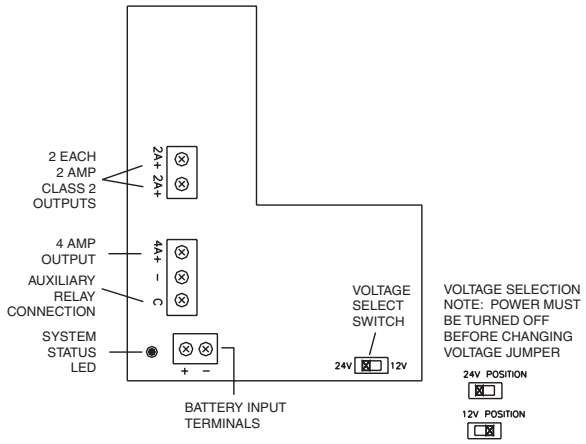

Table 2: 12VDC Standby Power

7 Ah Batteries Amp Hours	1 7Ah	2 14Ah	3 21Ah	4 28Ah	5 35Ah	6 42Ah	7 49Ah	8 56Ah	9 63Ah	10 70Ah
Load/Amps	Power Back-up Time in Hours									
1	5.7	14	20	30	33	41	48	55	62	69
1.5	3.6	8	13	18	23	29	33	37	39	44
2	2.5	6	8.5	13	17	20	24	28	30	35
2.5	1.9	4.6	7	10	13	16	19	22	26	29
3	1.6	3.8	5.5	8	10	12.6	15	17.5	21	23
3.5	1.3	3.2	4.6	6.7	8.5	10.5	14.5	14	17.5	19.5
4	1	2.6	4	5.6	7.3	9	10.5	12.5	14.5	16.5

Table 3: 24VDC Standby Power

7 Ah Batteries Amp Hours	2 7Ah	4 14Ah	6 21Ah	8 28Ah	10 35Ah
Load/Amps	Power Back-up Time in Hours				
1	5.6	14	20	30	33
1.5	3.6	8	13	18	23
2	2.5	6	8.5	13	17
2.5	1.9	4.6	7	10	13
3	1.6	3.8	5.5	8	10
3.5	1.3	3.2	4.6	6.7	8.5
4	1	2.6	4	5.6	7.3

Controller

UR-2A Two Station Controller
UR-4A Four Station Controller

The UR series is a microprocessor based controller that provides six different, field selectable application modes for two, three or four stations. The controller installs in 600 series power supplies. Or, individual UR Series Access Hardware Controllers may be mounted in remote junction boxes and powered by a single power supply.

Interface and Centralized Wiring
The UR Series Access Hardware Controller provides complete system interface capability and centralized wiring of all components, including; access controls, electric locks, peripheral equipment and monitoring contacts.

Reduced Components and Engineering
Applications that require several individual relays may be costly and complicated, requiring additional engineering time to produce the proper system logic. The UR eliminates the need for multiple or different relays. All system logic is reduced to one controller.

Selectable Output Modes

- Conventional Relay
- Latching Relay (pulse on, pulse off) Latch individual station or all stations
- Time Delay Relay 1-35 seconds
- *Dual, Latching & Time Delay Relay
- Mantrap - All doors normally locked
- Interlock - All doors normally unlocked
- Interlock - 1 door locked, 1 door unlocked. **UR-2A only**

*Primary input triggers the Time Delay
Auxiliary input triggers latch function

The relay mode may be different per individual station. When mantrap or interlock mode is selected all outputs operate the same.

Documentation

Several access control and mantrap system wire diagrams are provided for common applications.

"Security Industry Finest"
ISC Expo East and West

UR-2A Specifications

Input Voltage: 12 or 24VDC +/- 10%

Input Current: 280 mA, at rest
350 mA, operating

Trigger Inputs: N.O. Dry, Optically Isolated

Outputs:
2 Fused SPDT Dry, 5 Amp @ 30VDC
2 Non-fused, SPDT Dry, 1 Amp @ 30VDC

UR-4A Specifications

Input Voltage: 12 or 24VDC +/- 10%

Input Current: 350 mA, at rest
430 mA, operating

Trigger Inputs: N.O. Dry, Optically Isolated

Outputs:
4 Fused SPDT Dry, 5 Amp @ 30VDC
4 Non-fused, SPDT Dry, 1 Amp @ 30VDC

Dimensions: 7" W x 5" H x 2" D
(177.8 x 127 x 50.8 mm)

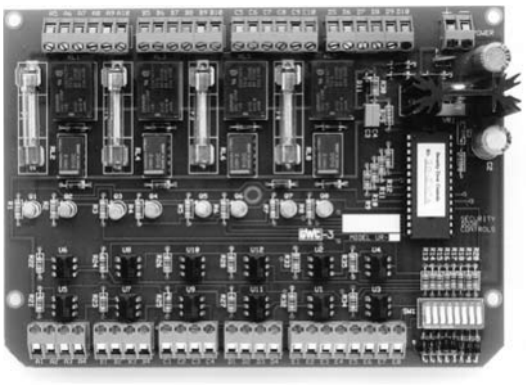

The UR4A is capable of providing the logic of 8 relays.

Time Delay Logic

Latching or Conventional Relay Logic

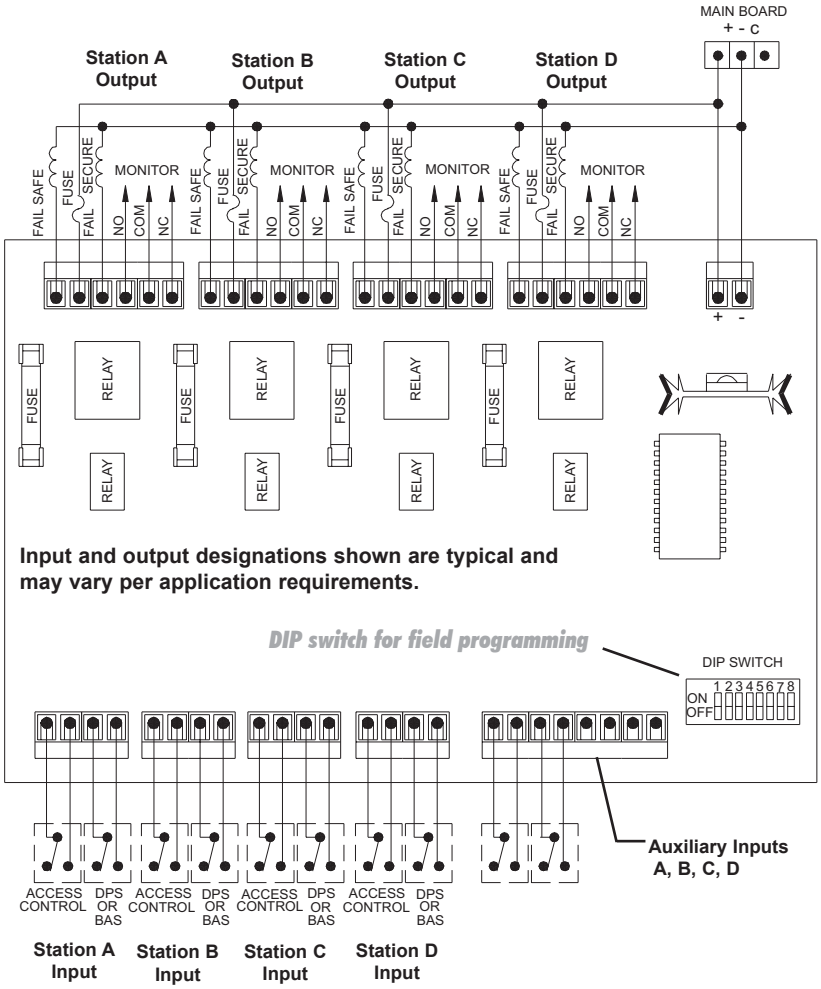

Door Control Modules

Door control relay modules ensure compatibility of access hardware components and simplify system installation and troubleshooting. Different modules may be specified for one power supply. **See Table 1 to determine the module capacity of the power supply.** The isolated relay design allows small gauge cable runs of 20 gauge wire up to 1000 feet from the trigger device to the module. ***See Table 4 to determine the wire gauge for electric locks***.

ACM-1 Access Control Interface Module

Input Voltage: 12 or 24VDC
Input Current: 45mA
Eight Trigger Inputs: 4 N.C. and 4 N.O., dry
Voltage/Lock Output: SPDT, 5 Amps @ 30VDC
Auxiliary Output: SPDT Dry, 5 Amps @ 30 VDC
Dimensions: 4.25" W x 3.375" H (108 x 111 mm)

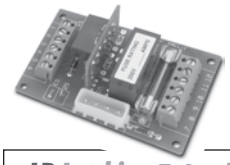

LR Latching Relay Module

Input Voltage: Specify 12 or 24VDC
Input Current: 35mA
Trigger input: Two position, Center off, N.O., dry, momentary pulse to latch on and off
Voltage/Lock Output: Fused SPDT, 5 Amps @ 30VDC
Dimensions: 3.25" W x 2" H (83 x 51 mm)

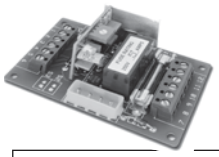

TD Time Delay Relay Module

Input Voltage: 12 or 24VDC
Input Current: 35mA
Dry Trigger Inputs:
One - N.O. Dry, One - N.C. Dry
Wet Trigger Input:
Normally Off, The trigger voltage must be the same as the lock and supply voltage.
Anti-Tailgate/Reset Input:
N.O. Dry, When the door opens the magnetic contact closes, resetting the timer. The door locks when closed.
Voltage/Lock Output:
Fused SPDT, 5 Amps @ 30VDC
Auxiliary Output: Non-fused SPDT Dry 5 Amps @ 30 VDC
Dimensions: 3.25" W x 2" H (83 x 51 mm)

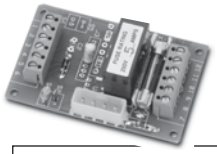

CR Control Relay Module

Input Voltage: Specify 12 or 24VDC
Input Current: 35mA
Dry Trigger Input: One N.O. Dry
Wet Trigger Input: Normally Off, Trigger Voltage must be the same as the relay and supply voltage, AC or DC
Voltage/Lock Output:
Fused SPDT, 5 Amps @ 30VDC
Auxiliary Output: Non-fused SPDT Dry, 5 Amps @ 30 VDC
Dimensions: 3.25" W x 2" H (83 x 51 mm)

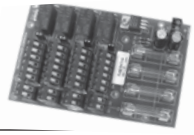

CR4 Four Station Relay Module

Input Voltage: 12 or 24VDC
Input Current: 150mA Max
Trigger Inputs: Four N.O. Dry
Lock Outputs: Four, Fused SPDT Wet or Dry, 2 Amps @ 30VDC
Auxiliary Outputs: 4, Non-fused, SPDT Dry, 2 Amps @ 30VDC
Dimensions: 6" W x 3" H (153 x 76 mm)

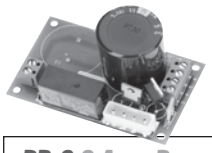

PB-8 8 Amp Power Booster

Input Voltage: 24VDC
Input Current: 85mA
Trigger Input: N.O. Dry
Lock Output: SPDT, 24VDC
1 Amp Continuous, 8 Amps Surge
Dimensions: 3.25" W x 2" H (83 x 51 mm)

PB-16 16 Amp Power Booster

Input Voltage: 24VDC
Input Current: 85mA
Trigger Input: N.O. Dry Contact
Lock Output: SPDT, 24VDC
1 Amp Continuous, 16 Amps Surge
Dimensions: 3.25" W x 2" H (83 x 51 mm)

Table 4: Wire Gauge Chart (AWG) — Distance in feet for 2 conductors from power source to the locking device.

AMPS	25	50	75	100	150	200	250	300	400	500	25	50	75	100	150	200	250	300	400	500	1000
0.25	18	18	18	18	18	18	16	16	14	14	18	18	18	18	18	18	18	18	18	14	14
0.50	18	18	18	18	16	14	14				18	18	18	18	18	18	18	16	16	14	
0.75	18	18	18	16	14	14					18	18	18	18	18	16	16	14	14		
1.00	18	18	16	14	14						18	18	18	18	16	16	14	14			
1.50	18	18	16	14							18	18	18	16	16	14					
2.00	18	18	14	14							18	18	16	16	14						
2.50	18	18	14	14		**Minimum Wire Gauge**					18	18	16	14	14		**Minimum Wire Gauge**				
3.00	16	16	14	12		**for 12V AC/DC**					18	16	14	14	14		**for 24V AC/DC**				
3.50	16	16	12	12							18	16	14	14	12						
4	14	14	12	12							16	16	14	12	12						
5	14	14	12								16	14	14	12							
6	12	12									14	14	12	12							

SECURITY DOOR CONTROLS

SDC

P.O. Box 6219, Westlake Village, CA 91359-6219
3580 Willow Lane, Westlake Village, CA 91361-4219
(805) 494-0622 · (800) 413-8783 · Fax (805) 494-8861
Email: service@SDCsecurity.com www.SDCsecurity.com

© 2007 Security Door Controls Printed in the U.S.A. LIT-634RF Power Supply 5/07 2500 CR