SECURITY DOOR CONTROLS

3580 Willow Lane, Westlake Village, CA 91361-4921 • (805) 494-0622 • Fax: (805) 494-8861
www.sdcsecurity.com • E-mail: service@sdcsecurity.com

REMOTE CONTROLS AND ANNUNCIATORS WIRING

101-1AK

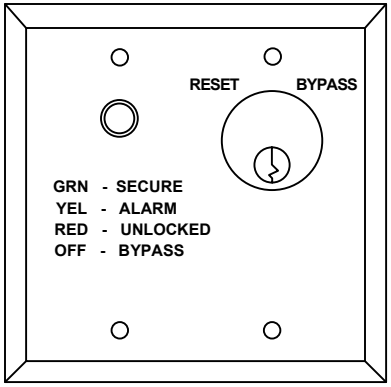

101-4AM

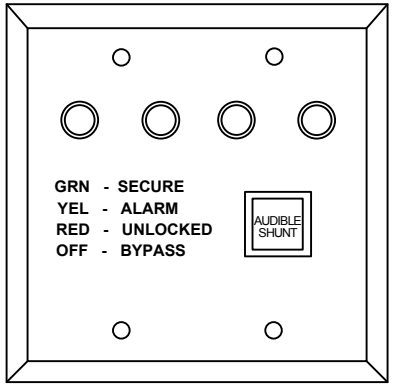

101-PAM

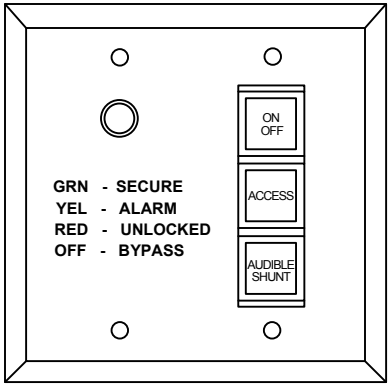
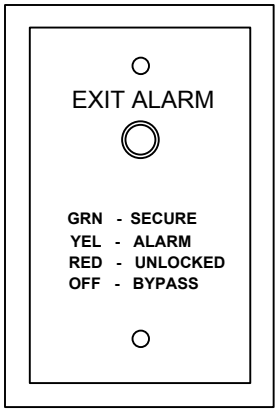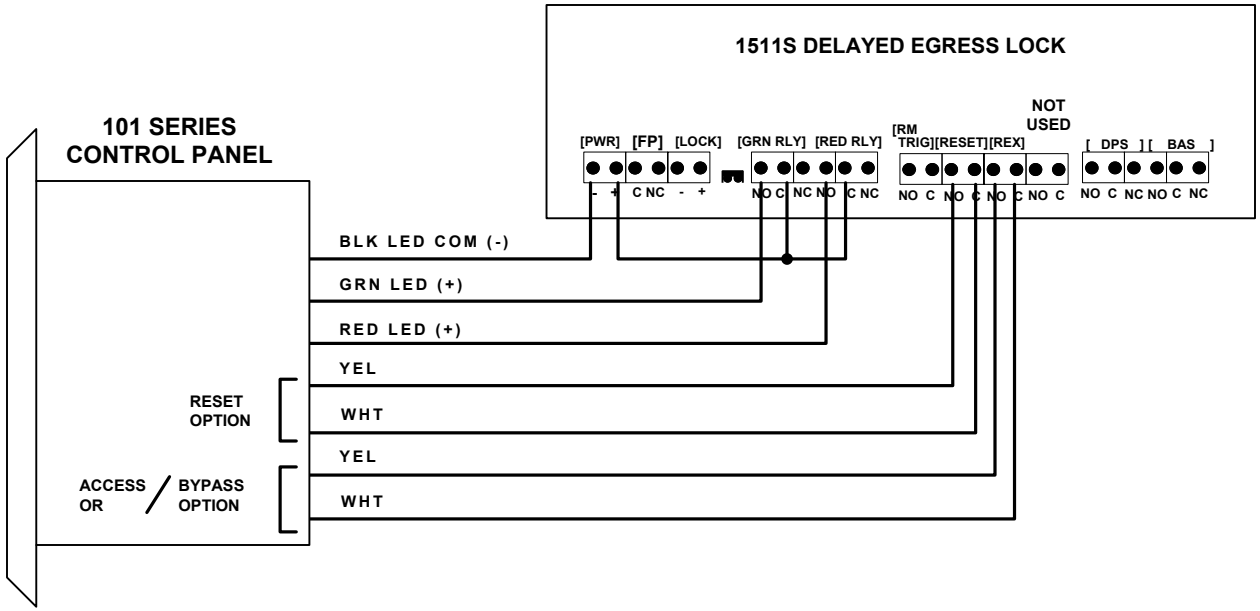
101-1A