700 - 800 Series Key Switches

Application

SDC key switch assemblies provide an economical method of providing authorized control for a variety of applications. A choice of several contact configurations ensure compatibility with virtually any system.
Applications include:

- **Access Control**
- **Automatic Gate Operation**
- **Roll Up Door Operation**
- **Alarm Shunt**
- **Alarm Reset**
- **Machine Operation**

New Construction or Retrofit

SDC key switch assemblies are compatible with U.S. standard, 1.125" and 1.25" mortise key cylinders and interchangeable core cylinders (not included). Compatibility with a new or existing facility mechanical key system is maintained. Standard switch assemblies are single gang box mounted. Assemblies equipped with narrow faceplates are mounted directly to the door frame.

Functions

- **Momentary**
- **Timed Actuation (1-60 seconds)**
- **Alternate Action (On-Off)**

Features

- **Tamper resistant, recessed cylinder** (all except 700N)
- **Tamper resistant spanner screws**
- **Heavy duty all steel assembly**
- **Stainless steel faceplates of 20 gauge or 0.25" thickness.**
- **Large actuator for positive and consistent activation**
- **6 Amp @ 30 VDC**
- **7", 22 gauge wire leads**

700 Series

- 20 gauge, stainless steel faceplate
- Spanner security screws and tool
- Plated finishes optional

700
- Single gang, wall mounted
- Anti-tamper recessed key cylinder

700N
- Narrow 1.75" wide, frame mo

800 Series High Security

- 0.25" thick face plate
- Spanner security screws and tool
- Anti-tamper plugs for mounting screws
- Anti-tamper, recessed key cylinder
- Plated and dark bronze anodized finishes optional

Base Material
0.25" thick stainless steel is standard when dull stainless steel and plated finishes are specified. 0.25" thick aluminum is standard when anodized finishes are specified for matching aluminum frames.

800
- Single gang, wall mounted

800N
- Narrow, 1.75" wide, frame mounted
- Four mounting screws provide increased integrity

700

700N

800

800N

MADE IN THE USA

ISO 9001:2000
FM 52705

www.sdcsecurity.com E-mail: service@sdcsecurity.com

700

- **Security Screws**
- **Cylinder Recess (N/A 700N)**
- **20 gauge Stainless Steel**

700N

800

- **0.25" Faceplate**
- **Anti-Tamper Plugs**
- **Security Screws**
- **Cylinder Recess**
- **Stainless steel or aluminum standard**

800N

700T / 800T

- **Two Gang**
- **4 security screws**
- **20 gauge or 0.25" stainless steel standard**

Two gang faceplates provide for the use of a larger junction box to accommodate time delays, audible annunciation and increased wiring.

Finish

700 / 700N / 700T / 800 / 800N / 800T
(Base material, stainless steel or brass)

C 605 Bright Brass **D** 611 Satin Brass
F 611 Bright Bronze **G** 612 Satin Bronze
H 613 Oil Rubbed Bronze
P 625 Bright Chrome
U 630 Satin Stainless Steel (standard)

800AL / 800ALN / 800ALT
(base material, 0.25" aluminum)

V 628 Satin Aluminum (standard)
X 313 Dark Bronze
Y 335 Black

Example: 702**U** 802N**V**

10 Amp	6 Amp	Alternate Action SPDT	Application
701-10 701N-10 801-10 801N-10	701 701N 701T 801 801N 801T	Turning the key left or right actuates and latches the contact. Contact position is maintained until the key is inserted and turned again.	• Circuit on-off • Access control bypass • Alarm bypass • Machine operation

10 Amp	6 Amp	Momentary SPDT	Applications
702-10 702N-10 802-10 802N-10	702 702N 702T 802 802N 802T	Turning the key left or right momentarily actuates the contact.	• Momentary access • Timer activation • Alarm reset

	6 Amp	Momentary SPDT plus 10TD Electronic Mini Timer SPDT 2 Amp @ 30 VDC Adjustable 1-60 seconds	Applications
	704 804T 704 804T	Turning the key left or right activates an electronically timed contact for 1 to 60 seconds.	• Timed access • Timed alarm shunt

	6 Amp	Alternate Action DPDT	Applications
	705 705N 705T 805 805N 805T	Turning the key left or right actuates and latches the contacts. Contact position is maintained until the key is inserted and turned again.	Control two circuits simultaneously • Access control **and** alarm bypass • Lock **and** magnetic door holder control

	6 Amp	Momentary DPDT	Application
	706 706N 706T 806 806N 806T	Turning the key left or right momentarily actuates the contacts.	Control two circuits simultaneously

	6 Amp	#1 Momentary SPDT #2 Momentary SPDT	Application
	707 707N 707T 807 807N 807T	Turning the key left momentarily actuates contact #1. Turning the key right momentarily actuates contact #2.	Control two circuits independently

6 Amp 708 708N 708T 808 808N 808T	**#1 Momentary SPDT** **#2 Alternate Action SPDT** Turning the key left momentarily actuates contact #1. Turning the key right actuates and latches contact #2 until the key inserted and turned again.	**Application** Control two circuits independently • Momentary access and sustained bypass of a door

6 Amp 709 709N 709T 809 809N 809T	**#1 Alternate Action SPDT** **#2 Alternate Action SPDT** Turning the key left actuates and latches contact #1. Turning the key right actuates and latches contact #2.	**Application** Control two circuits independently • Bypass single station with #1 Bypass all with #2

6 Amp 710T 810T	**#1 Momentary SPDT plus 10TD Electronic Mini Timer SPDT 2 Amp, 1-60 second** **#2 Alternate Action SPDT** Turning the key left activates an electronically timed contact #1 for 1 to 60 seconds. Turning the key right actuates & latches contact #2.	**Application** Control two circuits independently • Timed access **and** sustained bypass of a door • Timed alarm shunt (REX) **and** sustained alarm shunt

6 Amp 711 711N 711T 811 811N 811T	**#1 Momentary DPDT** **#2 Momentary DPDT** Turning the key left momentarily actuates contact #1. Turning the key right momentarily actuates contact #2.	**Application** Control two pairs of circuits independently

6 Amp 712 712N 712T 812 812N 812T	**#1 Momentary DPDT** **#2 Alternate Action DPDT** Turning the key left momentarily actuates contact #1. Turning the key right actuates and latches contact #2 until the key is inserted and turned again.	**Application** Control two pairs of circuits independently • Activate a time delay, REX input or alarm shunt with #1 • Access control and alarm bypass with #2

6 Amp 713 713N 713T 813 813N 813T	**#1 Alternate Action DPDT** **#2 Alternate Action DPDT** Turning the key left actuates and latches contact #1. Turning the key right actuates and latches contact #2.	**Application** Control two pairs of circuits independently

Options

Not available with FR series

ATS Anti-Tamper Switch.

L1 One LED. Specify Red or Green.

L2 Two LEDs: One Red, One Green.

RMB Buzzer. May be wired to sound when door is unlocked.
12 and 24VDC operation (700T only).

SN 85 db Siren. 3-28VDC (700T only).

10TD Mini Timer

The electronic Mini Timer provides timed unlocking and is compatible with all SDC momentary key and exit switches equipped with normally open contacts. The Mini Timer fits inside two gang key and exit switch assemblies, remote junction box and narrow frames.

Voltage Input: 12/24VDC @ 50 mA
Trigger Input: N.O. Dry
Contact: SPDT Dry, 2 Amps @ 30VDC
Wire Leads: 7", 20 Gauge
Time Adj: 1 to 60 seconds
Size: 0.75"W x 1.5"H x 2.25"D
(19.05 x 38.1 x 57.15mm)

Key Cylinder

CYL-KD
1.25" Mortise Key Cylinder and 2 keys. Keyed different. Two different tail pieces provided. See page 4.

Specification Example

702NU x L2

702U x L2

708TU x L2 x SN

Assembly Details

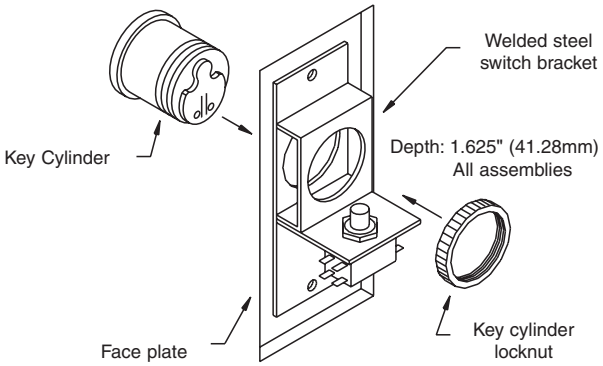

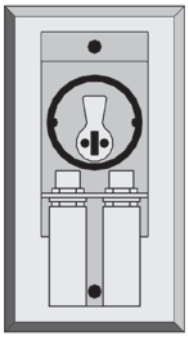

Dual Switch Assembly

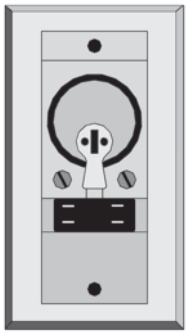

702/802, 10Amp Assembly

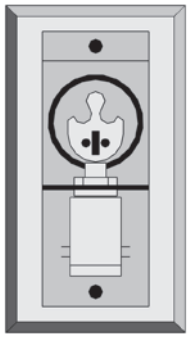

Single Switch Assembly
For all single switch assemblies except 10A 702/802 configuration.

Faceplate Dimensions

700:	2.875"H x 4.5"W x 20 Ga. (73 x 114 x 0.912mm)
700N:	1.75"H x 4.5"W x 20 Ga. (45 x 114 x 0.912mm)
700T:	4.5"H x 4.5"W x 20 Ga. (112 x 112 x 0.912mm)
800:	3.25"H x 5"W x 0.25"D (83 x 127 x 6.35mm)
800N:	1.75"H x 5"W x 0.25"D (45 x 127 x 6.35mm)
800T:	5"H x 5"W x 0.25"D (127 x 127 x 6.35mm)

Tailpiece (actual size shown)

Compatible with all dual switch assemblies and 10A configuration of 702/802.

Compatible with all single and dual switch assemblies except 10A 702/802 configuration.

Assembly Tools

For convenience, a small spanner tool is provided with the assembly for fastening of spanner security screws.

Part # **SS632**, a standard spanner screwdriver, may be ordered separately.

700N /800N Frame Preparation

1.75" (44.45mm) minimum frame face

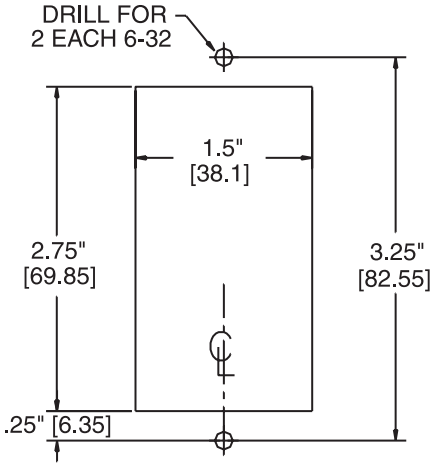

SECURITY DOOR CONTROLS
Box 6219, Westlake Village, CA 91359-6219
3580 Willow Lane, Westlake Village, CA 91361-4921
(805) 494-0622 • (800) 413-8783 • Fax: (805) 494-8861
P.O.

© 2004 Security Door Controls Printed in the U.S.A. LIT-KeySwitches Rev.1104 4.0 CR