Exit Check® - Delayed Egress All-In-One Device

Distributor Discount Code **XK**

The Exit Check® All-In-One Device integrates our premium Spectra™ bar with SDCs innovative delayed egress electronics. When unauthorized egress is innitiated by depressing the push pad of the S6000-101, an audible alarm will sound and an irreversible delay period of 15 seconds will begin. After the delay period has expired, the device unlocks, permitting egress until the device is reset. In a life safety emergencty, the device will immediatly unlock upon loss of power or when powered by a fire control supervised power supply. **Door contact included for anti tailgate and door prop.**

APPLICATION INCLUDE:

- Restricting the egress of wandering patients for their own safety
- Restricting the egress of commercial center patrons for security application needs
- Controlling pedestrian traffic in transportation facilities, including airport jetways and tarmacs
- Reducing shoplifting and employee theft

SECURITY UL LISTED

FWAX SPECIAL LOCKING ARRANGEMENTS

Single: 24VDC @ 540 mA **Pair:** 24VDC @ 790 mA

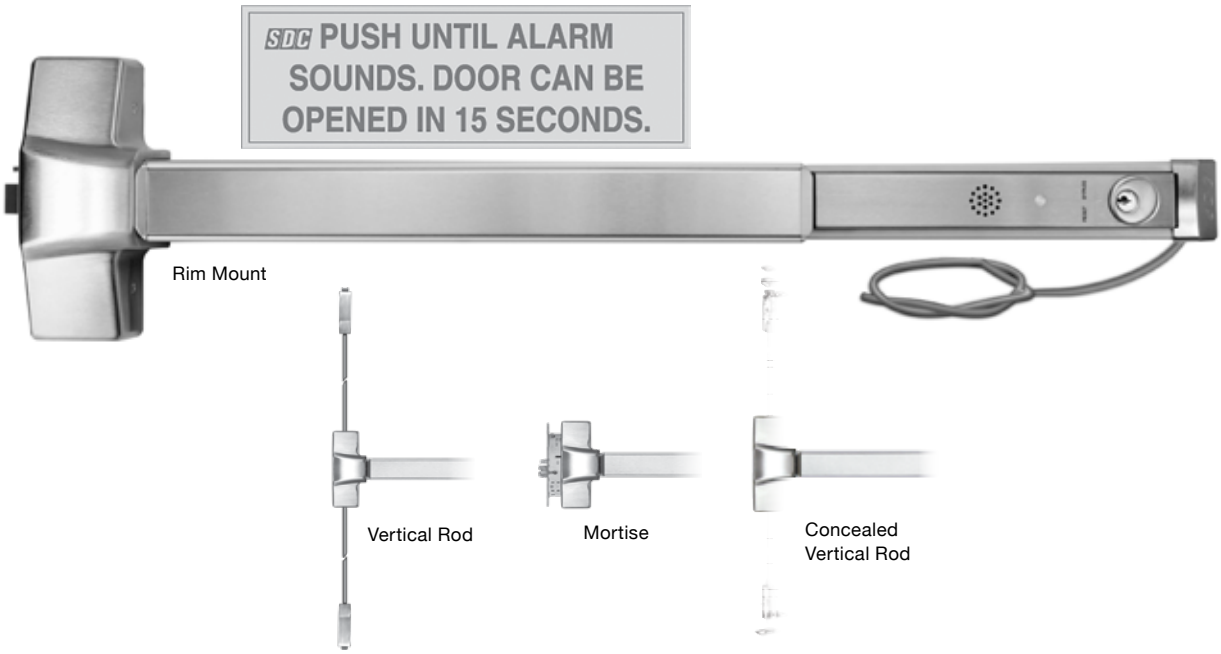

SPECIFY DEVICE			LIST
S61	Rim mount exit device		**621.00**
S62	Surface Vertical - ROD GUARDS SUGGESTED		**932.00**
S63	Mortise ***[03 Lever Trim included]*** *- specify:*	**EE/GE** *Eclipse Escutheon/Galaxy Escutheon*	**1139.00**
S68	Concealed Vertical		**1035.00**

SPECIFY FUNCTION					
01	Exit Only	**02**	Dummy	**03** Nightlatch	**N/C**

SPECIFY PANIC OR FIRE RATED				Add to List
P	Panic	**N/C**	**F** Fire	**114.00**

SPECIFY HAND (Mortise Only)			
RR	Right hand reverse bevel, RHRB	**LR** Left hand reverse bevel, LHRB	**N/C**

SPECIFY FINISH		
U	630 Dull Stainless Steel	**N/C**

SPECIFY LENGTH				Add to List
36 For 36" Door (standard)	**N/C**	**42** For 42" Door	**21.00**	**48** For 48" Door **42.00**

SDC SECURITY DOOR CONTROLS
801 Avenida Acaso • Camarillo, CA 93012
Email: Service@sdcsecurity.com • www.sdcsecurity.com

Price List Effective February 1, 2017

Exit Check® - Delayed Egress All-In-One Device

Distributor Discount Code **XK**

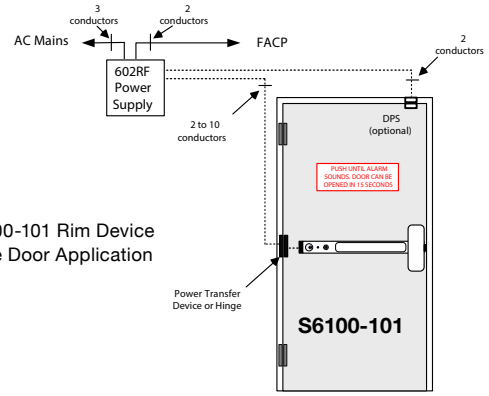

S61000-101 Rim Device
Single Door Application

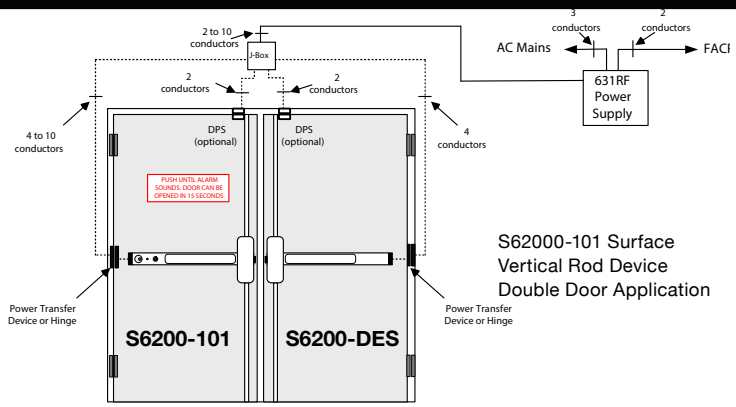

S62000-101 Surface
Vertical Rod Device
Double Door Application

SPECIFY DELAYED EGRESS — Add to List

101	Electrification of master exit device and integrated controller with key switch control and reset, less cylinder	**1398.00**
DES	For pair of doors, additional exit device equipped with delayed egress mechanism, less integrated controller. **Must be ordered together with 101 device.**	**518.00**

SPECIFY OPERATION

If no Code is specified - ND is the SDC Standard Operations Mode for this product

NC	**IBC, IFC, NFPA 101, NFPA 1-UFC, UBC,SBC Compliant** Fixed 15 exit delay, 1 or 2 second nuisance delay Calif. Building Code OSHPD/Manual Power Up	**N/C**
ND	**IBC, IFC, NFPA 101, NFPA 1-UFC, UBC,SBC Compliant** Fixed 15 exit delay, 1 or 2 second nuisance delay	**N/C**
BC	**BOCA National Building Code and Chicago Building Compliant** 15 second fixed exit delay, 0 second nuisance delay, auto reset 30 seconds after door closure	**N/C**
BD	**BOCA National Building Code** 15 second fixed exit delay, 1 or 2 second nuisance delay, auto reset 30 seconds after door closure	**N/C**

EK

GK

EKE

GKE

SPECIFY TRIM (optional) — Add to List

FOR S61 RIM, S62 SURFACE AND S68 CONCEALED VERTICAL ONLY

Mechanical Trim (less cylinder)

EK03U	Eclipse Escutheon	**GK03U**	Galaxy Escutheon	**233.00**

Electric Trim

- Failsecure, field reversible to failsafe
- 600/300 mA @ 12/24VDC
- 4 ft cable and connectors

EKE03U	Eclipse style electric trim less mortise cylinder, Stainless Steel Finish	**699.00**
GKE03U	Galaxy style electric trim less mortise cylinder, Stainless Steel Finish	**699.00**

TRIM OPTIONS — Add to List

CYL-6KDQ	6 pin, 1.125" mortise cylinder, keyed different, dull chrome	**32.00**
CYL-6KAQ	6 pin, 1.125" mortise cylinder, keyed alike, dull chrome	**32.00**
RIM-CYL-KA	Rim Cylinder for 03 Function, keyed alike - see page 39 for more info	**34.00**

PTM Series

PTH x 5 Ft Cable

PT5

PT-3V

SPECIFY POWER TRANSFER (For the entire line of Power Transfer, see page 88 and page 89) — LIST

PTM-10AL	(10) Cond.,5 Amp @ 12/24V AC/DV, Alum US28	**371.00**	**PTH-10Q**	(10) Cond.,1 Amp @ 12/24V per pair, 4.5" x 4.5"	**202.00**
PT-5	UL Listed Concealed Power Transfer Device, less wires	**63.00**	**PT-3V**	Armored flex conduit, less wires, with wire junction box	**47.00**

602RF (shown)
600 Series Power Supply

SPECIFY POWER SUPPLY (For the entire line of Power Suplies, see page 90) — LIST

602RF	1 Amp, class 2 output, 12" W x 12" H x 3.75" D box	**270.00**
631RF	1.5 Amp, class 2 output, 12" W x 12" H x 3.75" D box	**363.00**

Note: 600 series Power Supply required with S6000-101 for UL listing

Price List Effective February 1, 2017

SDC SECURITY DOOR CONTROLS
801 Avenida Acaso • Camarillo, CA 93012
Email: Service@sdcsecurity.com • www.sdcsecurity.com